D-SUB METAL HOOD

8027 SERIES. D-Sub metal hood.

General Features

- Available in 9(15), 15(26), 25(44) and 37(62) ways D-Sub(D-Sub HD)
- Use in D sub 8000, 8001, 8002 and 8003 series and D sub HD 8070, 8071, 8072 and 8073 series
- Standard version mounting male long screw
- With different cable clamp (6 to 13.50 mm)
- Long screw

Materials

- Hood: Zinc alloy chromate plated
- Screwlock : Steel, 100 Nickel Plated
- Operating temperature. -25ºC to +85ºC
- RoHS compliant

Dimension Information
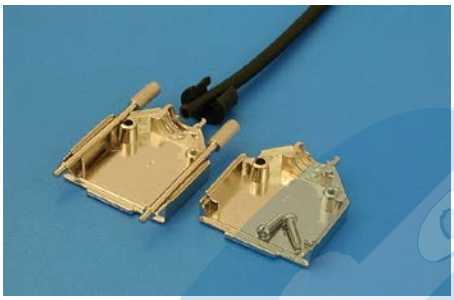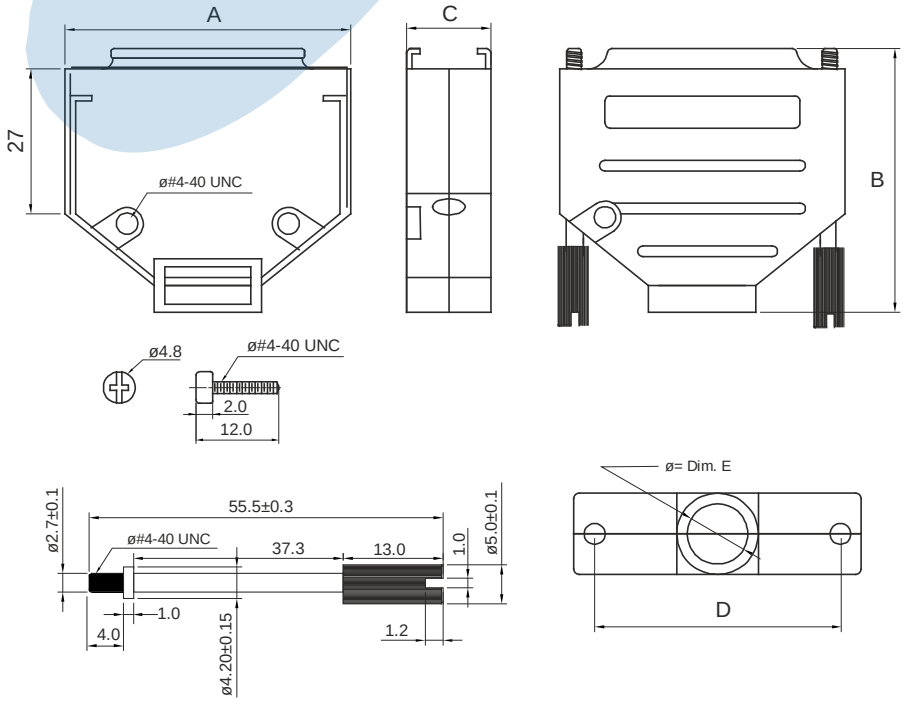
Circuit Size	Part Number	Dimensions				
		A	B	C	D	E
9	**8027 – 2091**	31.00	46.00	15.60	24.99	Ø6.0 ~ 11.0
15	**8027 – 2151**	39.00	46.00	15.60	33.32	Ø6.0 ~ 11.0
25	**8027 – 2251**	53.00	46.00	15.60	47.04	Ø9.0 ~ 13.0
37	**8027 – 2371**	71.00	54.80	15.60	63.50	Ø10 ~ 13.5