SIDE ENTRY SMT JACK DEC TYPE

7661 SERIES. Right angle PCB jack.

General Features

- Available in 8/8 circuits
- Standard telephone jack FCC-68
- Low profile: 9.58 mm.
- Accept standard plugs FCC-68 type
- Selective gold plating with different finish
- Plastic foot print

Electrical Features

- Voltage rating: < 125V
- Current rating: < 1.50 A
- Contact resistance: < 20 mΩ
- Dielectric withstanding voltage: 300 V AC/minute
- Insulation resistance: >1000 MΩ

Materials

- Insulator: Thermoplastic UL 94V-0
- Contact: 0.35 mm thickness phosphor bronze
- Operating temperature. -25°C to + 85°C
- RoHS compliant

Mechanical Features

- Durability: 1000 cycles

Dimensional Information

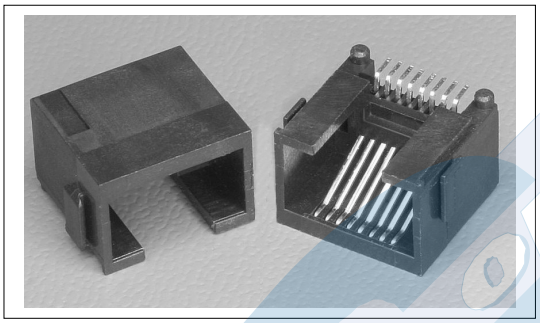

Circuits	Part Number
8/8	**7661 – T881**

T = Contact Plating
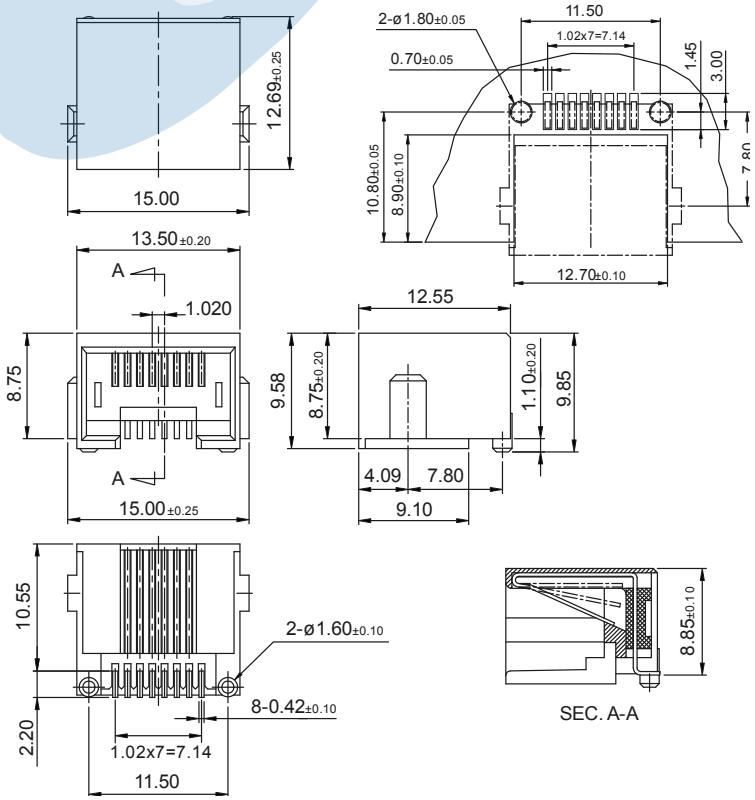
- T = **4.** 10μ" gold over 50μ" nickel
- T = **5.** 15μ" gold over 50μ" nickel
- T = **6.** 30μ" gold over 50μ" nickel
- T = **7.** 50μ" gold over 50μ" nickel