# MINI PCI EXPRESS SOCKET

## 5498 SERIES. Mini PCI Express socket.

### General Features

- Accept MINI PCI Express card
- Contact area: different gold plating over 50 µ nickel
- Solder area: tin plating over 50 µ nickel
- Stand-off: available in 4.00, 5.60, 8.00 or 9.20 mm.

### Electrical Features

- Voltage rating: < 50 V
- Current rating: < 0.50 A
- Contact resistance: < 30 mΩ
- Dielectric withstanding voltage: 250 V AC/minute
- Insulation resistance: >500 MΩ

### Materials

- Insulator: LCP UL 94 V-0
- Contact: Phosphor bronze
- Hold down: Tin brass
- Operating temperature. -25°C to +85°C
- RoHS compliant

### Mechanical Features

- Insertion force: > 50 gf/pin
- Durability: 100 cycles

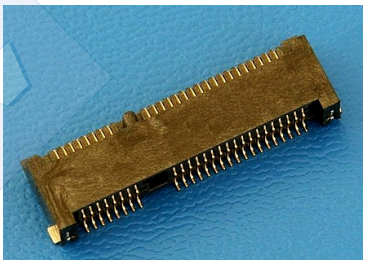

### Dimensional Information

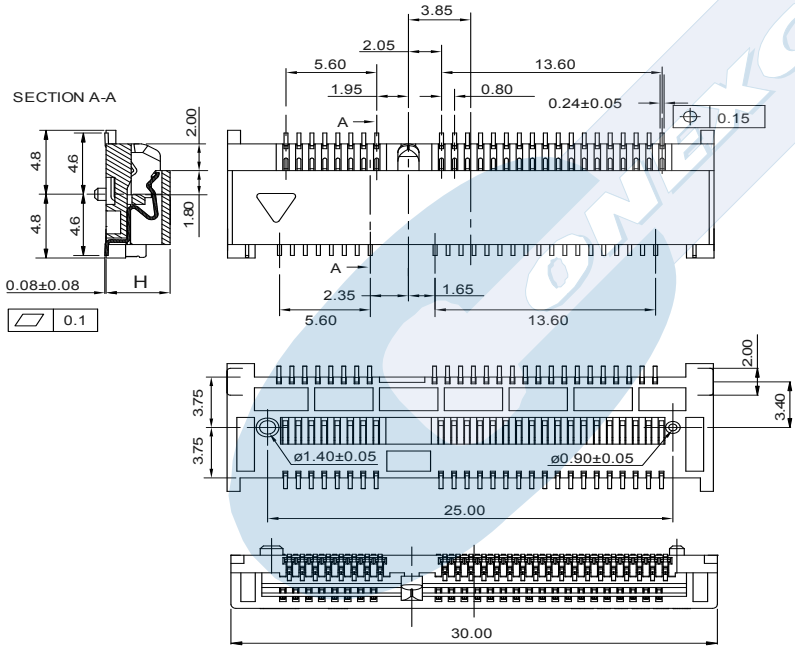


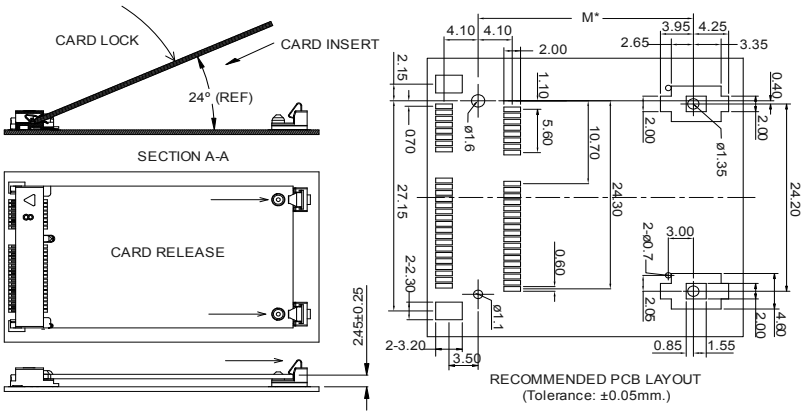


| *M Options | |
|---|---|
| Latch Design | 25.90 mm. for standard Card of 26.65 mm. |
| | 50.05 mm. for standard Card of 50.95 mm. |
| Nut design | 23.90 mm. for standard Card of 26.65 mm. |
| | 48.05 mm. for standard Card of 50.95 mm. |

**5498 - T- 52- L**

1 2 3 4

**1. Series**

**2. Plating Options**

- T = **5.** 15µ" gold over nickel Recommended Finish

**3. Number of circuits**

- Available in 52 circuits

**4. Connector Dimensions**
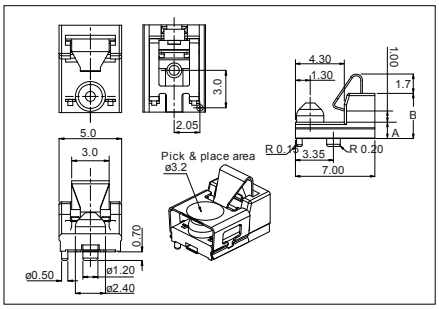
- L = **1.** Dim. **H**= 3.90; **A**= 1.45; **B**= 4.00
- L = **2.** Dim. **H**= 5.50; **A**= 3.05; **B**= 5.60
- L = **4.** Dim. **H**= 7.90; **A**= 5.45; **B**= 8.00
- L = **5.** Dim. **H**= 9.10; **A**= 6.65; **B**= 9.20