# SINGLE ROW SIDE ENTRY HEADER

## 1987 SERIES. 2.00 mm. (0.079”) pitch.

### General Features

- Available in 2 through 16 circuits
- Mates with 2.00 mm. pitch crimp housing 1985 series
- Tin plated round pin 0.50 mm.
- Fully shrouded with polarized slot

### Materials

- Insulator: PBT UL 94 V-0
- Contact: Tin plated brass
- Operating temperature: -25°C to +85°C
- RoHS compliant

### Electrical Features

- Voltage rating: < 250V
- Current rating: < 3 A
- Contact resistance: < 20 mΩ
- Dielectric withstanding voltage: 800 V AC/minute
- Insulation resistance: >1000 MΩ

### Mechanical Features

- Pin retention force to insulator: > 1.00 Kgf
- Durability: 25 cycles

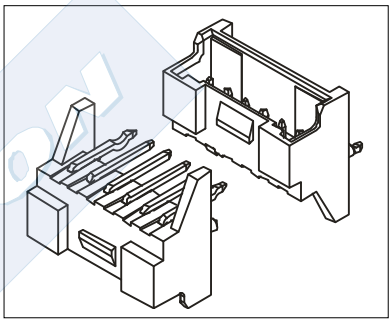

### Dimension Information

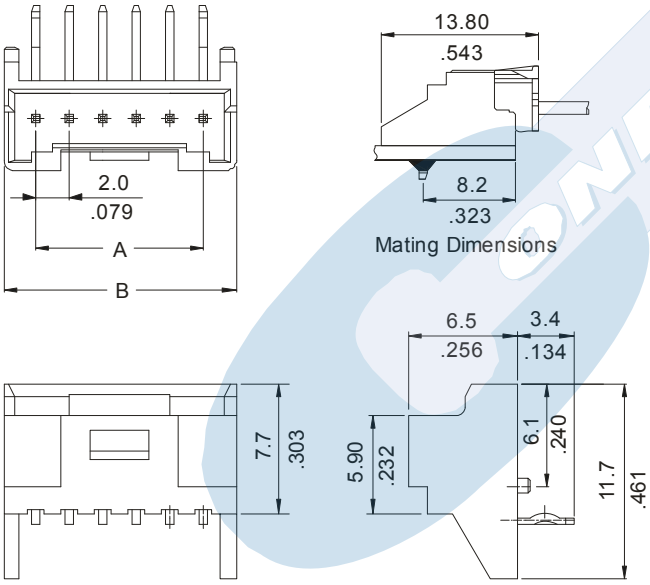


**Ordering Information:**

**1987 - 2- XX- P**

1 3 4

**1. Connector Series**

**3. (XX) Number of circuits**

- Available in 2 through 16 circuits

**4. (P) Fixing Post**

- P = **1.** Without fixing post
- P = **2.** With fixing post

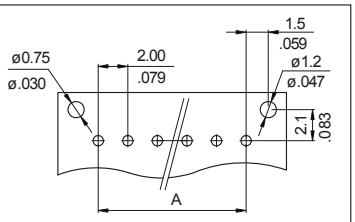


RECOMMENDED HOLE PATTERN

(PCB Tickness 1.0 ~1.6 mm.)

**Dimensions:** (In mm.)

**A** = 2.00 x (XX*-1)
**B** = 2.00 x (XX*)+2.00

*** XX** (Number of circuits)